EPA

WINROCK INTERNATIONAL

Cook Stoves & Indoor Air

Promoting Clean and Efficient Cooking in the Developing World

Cookstoves for Productive Uses

March 16, 2017

INITIATIVE DÉVELOPPEMENT
Association de solidarité internationale

InStove
INSTITUTIONAL STOVE SOLUTIONS

SNV
Ghana

Today's Speakers

- **John Mitchell**, U.S. Environmental Protection Agency, Webinar Facilitator
- **Julie Gaston**, Initiative Développement
- **Adam Creighton**, Institutional Stove Solutions (InStove)
- **Benedicta Avega**, SNV Netherlands Development Organisation

Purpose of the Webinar

- Share 3 case studies of how improved stoves can be used for productive use applications
- Demonstrate the benefits that can be gained though these approaches
- Provide important lessons learned and recommendations from organizations working on productive use applications in the field

Agenda

- Ylang-ylang oil distilling in Comoros (Initiative Développement)
- Shea butter and palm oil processing in Ghana (InStove)
- Fish smoking in Ghana (SNV)
- Questions and Answers

Questions to Consider

- What commercial applications in my community are highly dependent on biomass use?

- How might the use of improved stoves for productive uses enhance my business or program?

INITIATIVE DÉVELOPPEMENT
Association de solidarité internationale

Ylang-Ylang supply chain efficient stove distillation

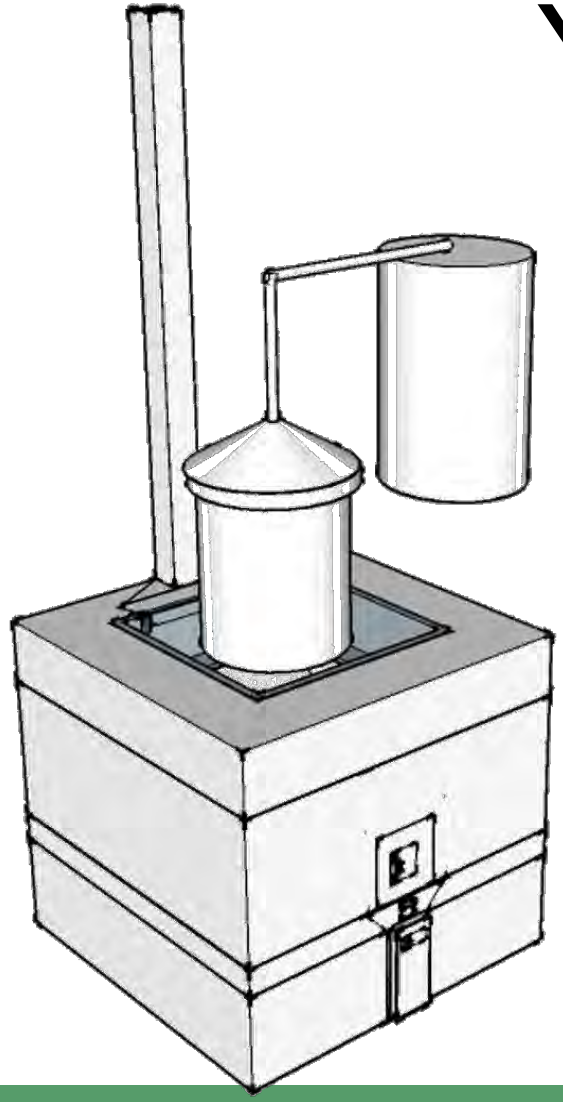

4 Energy efficiency projects

- 4 cookstoves supply chain projects (Congo, Tchad, Comoros, Senegal)
- 1 cookstove for productive use project

Distillation: Principles and Uses

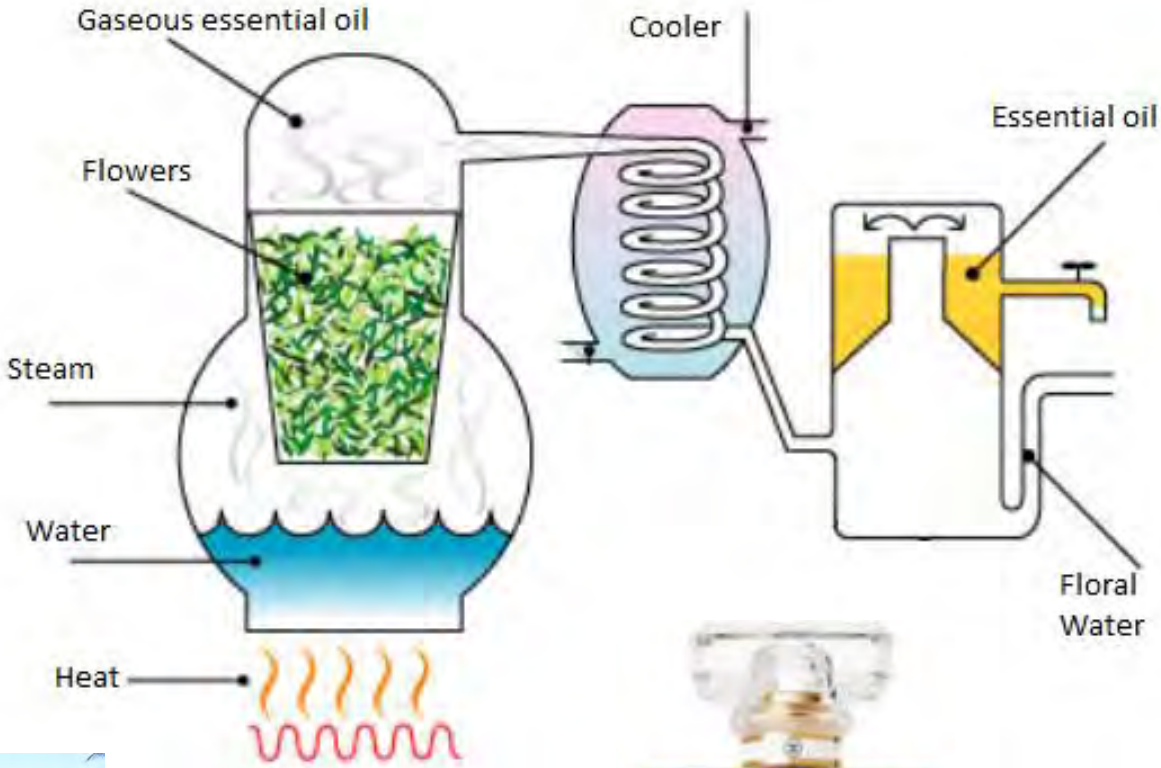

Ylang Ylang Distillation

From 1990 to 2014
85% of forest cover disappeared

Ylang-Ylang distillation
15% of deforestation

Ylang-Ylang Exportation
20% of GDP
10% of working population

- Disadvantages of traditional stills:
  - Wood consumption
  - Heat/ fumes exposure
  - Workload

Improved Technology Overview

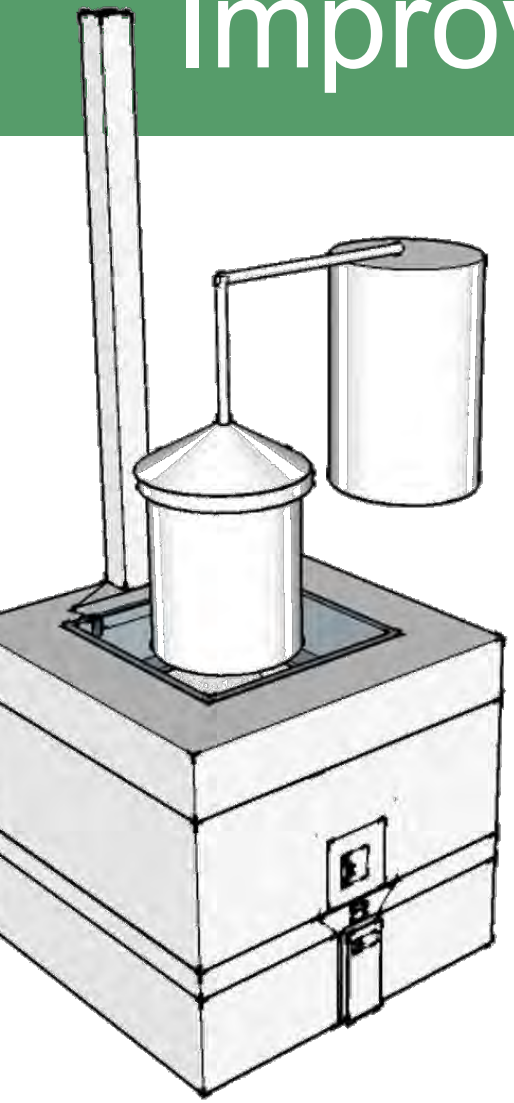

Total cost: ± 2000 €

Efficient Stove Benefits

- ✓ Wood consumption: -50%
- ✓ Flowers needed: -25%
- ✓ Distillation costs: -25%
- ✓ 4 times less time loading wood
- ✓ Distillers' margins: x4
- ✓ Improvement in oil quality: 30%

Project Overview

Build a sustainable Ylang-Ylang distillation supply chain in the Comoros

- Reduce impacts on natural resources
- Improve production conditions
- Perpetuate impacts

Project Results

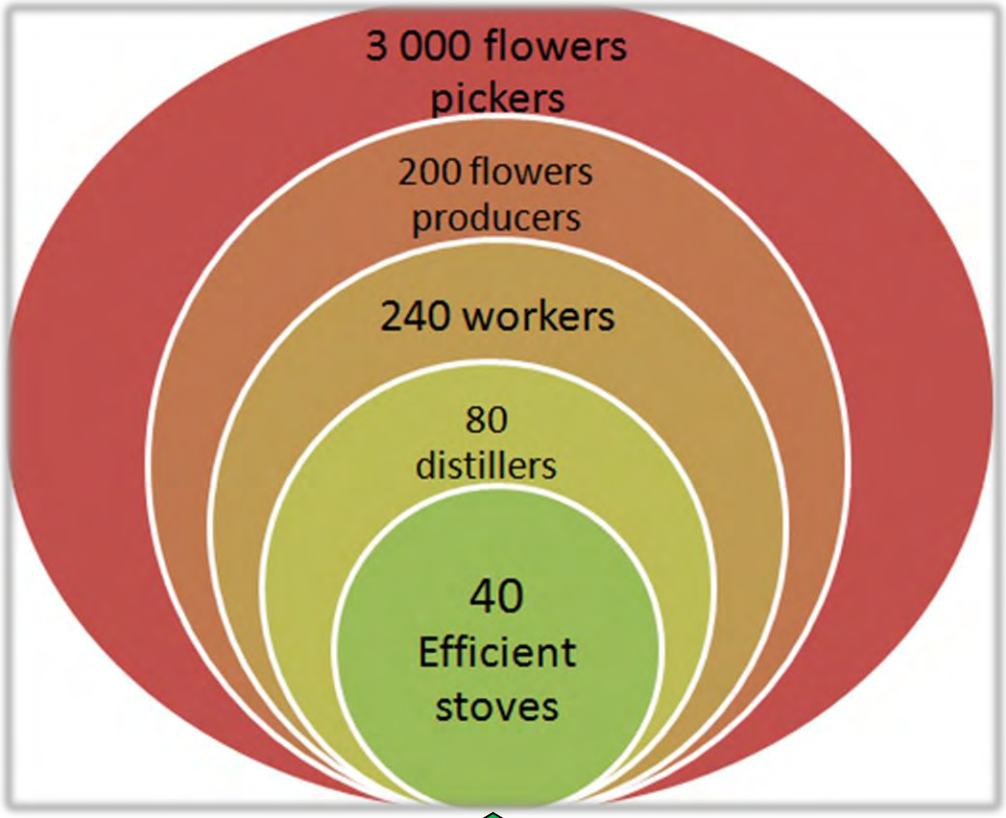

5 craftsmen trained

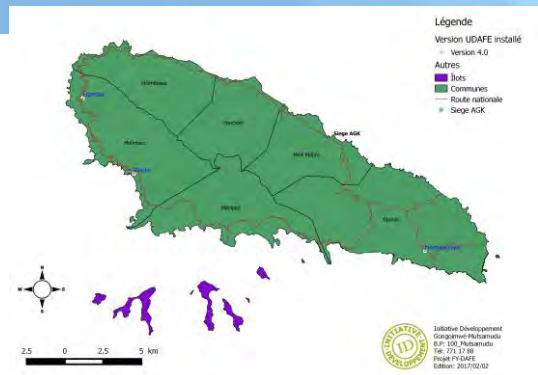

Oil Quality Impacts

Degrees increase:

30%

Lessons Learned

Technology success = Field adaptation

- Users' practices
- Raw materials and know-how availability
- Investment habits/ capabilities

Technology success ≠ State-of-the-art

Recommendations

Transfer production skills to locals

Ruggedness and maintenance

- Users side
- Local business side

Next Steps

Sustainability plan

- Autonomous efficient stoves' production supply chain
- Reinforce our work on the supply chain
- Spread technology in sub-region

InStove

One Stove, a world of solutions!

What is InStove?

- Reduces fuel use by 75-90%
- Produces 90-98% fewer harmful emissions
- Reduces cooking time by 50%

InStove's background

Fred and Damon

2007: Invent InStove;

2012: Launch *501(c)3 InStove.org*

2014: Launch Benefit Corporation

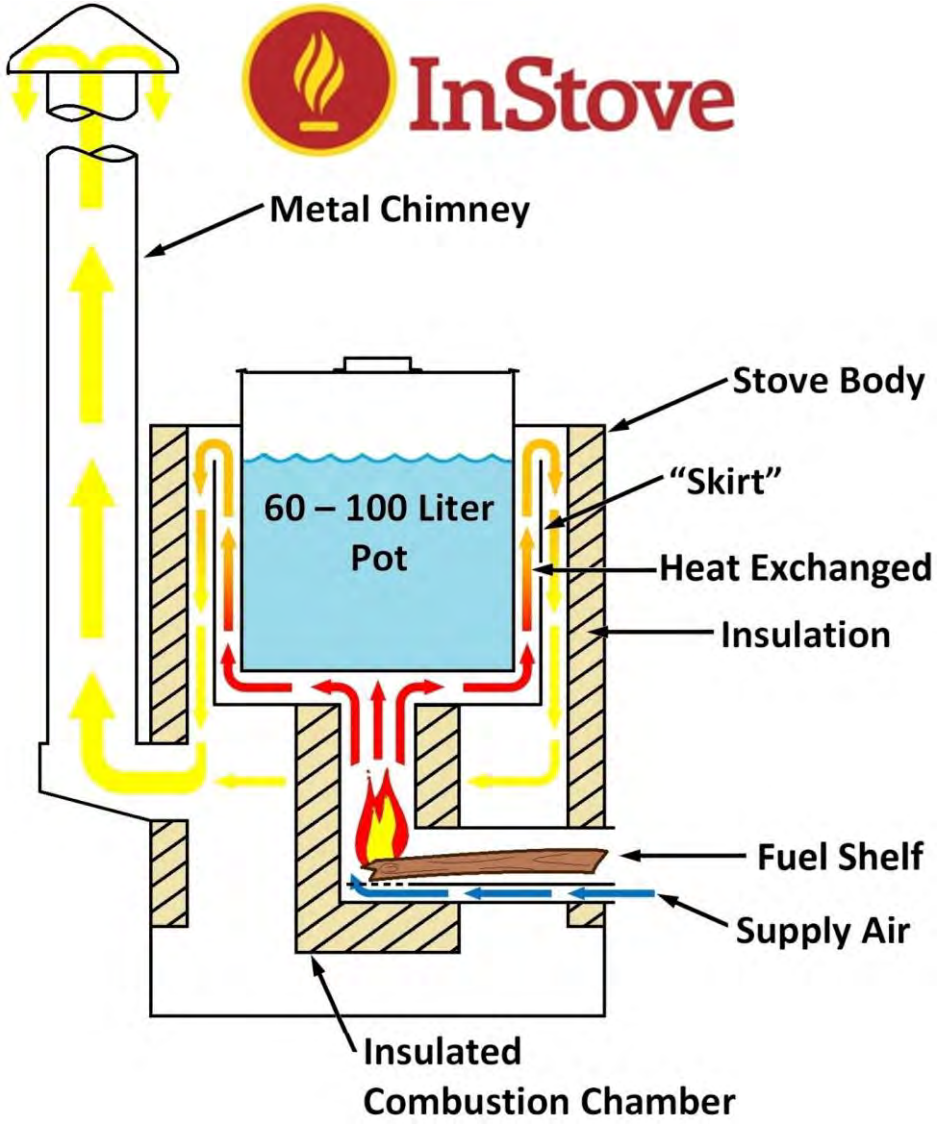

InStove Applications

InStove

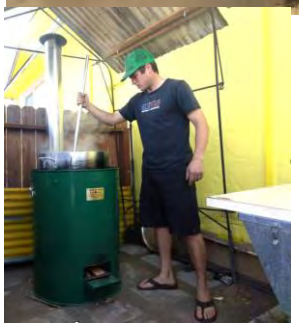

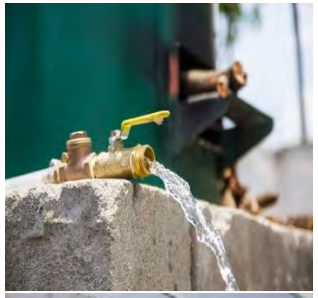

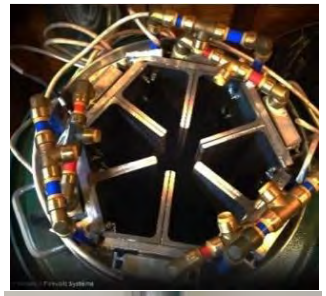

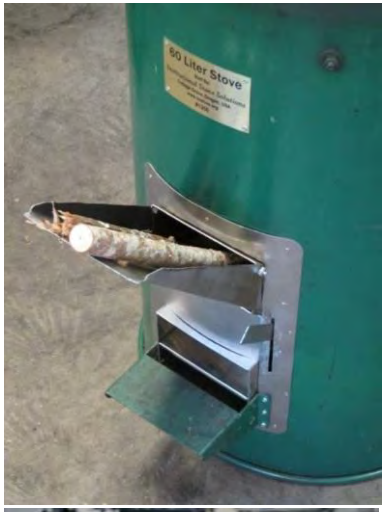

Traditional Shea Processing

InStove Shea Butter Processing

- Reduces wood for Shea Butter processing by 75-90%
- Reduces rendering time by 20-50%
- Safer for cooks
- Can be operated sustainably using crop waste (shea cake briquettes)
- Primary beneficiaries are traditional Shea butter processors (women and young girls)

Palm Nut Oil Processing

- Used to boil palm nuts
- Runs on small wood or biomass
- Complete cycle in 30 minutes
- Safer, faster, more sustainable than traditional methods

Palm Nut Oil Economic Value

- Each batch produced by 60L stove has Ghana value of $30
- Several batches can be produced each day
- Amortizes stove cost in a matter of weeks
- Like shea, primary beneficiaries are women and young girls

Palm Nut Oil Video, Ghana

https://www.youtube.com/watch?v=VQCz9YI1xmQ

Thank you!

FISH SMOKING IN GHANA

SNV

- Founded in 1965
- Established in Ghana in 1992
- Works in Agriculture, Energy and WASH
- Extensive experience in cookstoves; institutional and household
- Implemented 2 fish smoking projects in Ghana

Fish Smoking Background

- ~80% of landed fresh water and marine fish in Ghana is smoked
- 120,000 baseline ovens counted along the coast and fresh water regions
- SNV's interest in reducing deforestation through promotion and adoption of efficient ovens

Barrel Traditional Oven

Chorkor Oven

Baseline Technology Options

Barrel Traditional Oven	Chorkor Oven	Morrison Oven
Efficiency; Baseline	Efficiency; Baseline	Efficiency; 37% over chorkor
BaP 15; PAH4 72	BaP 22; PAH4 84	BaP 30; PAH4 110
Where EU limit is BaP 2; PAH 12		

Sustainable Fisheries Management Project

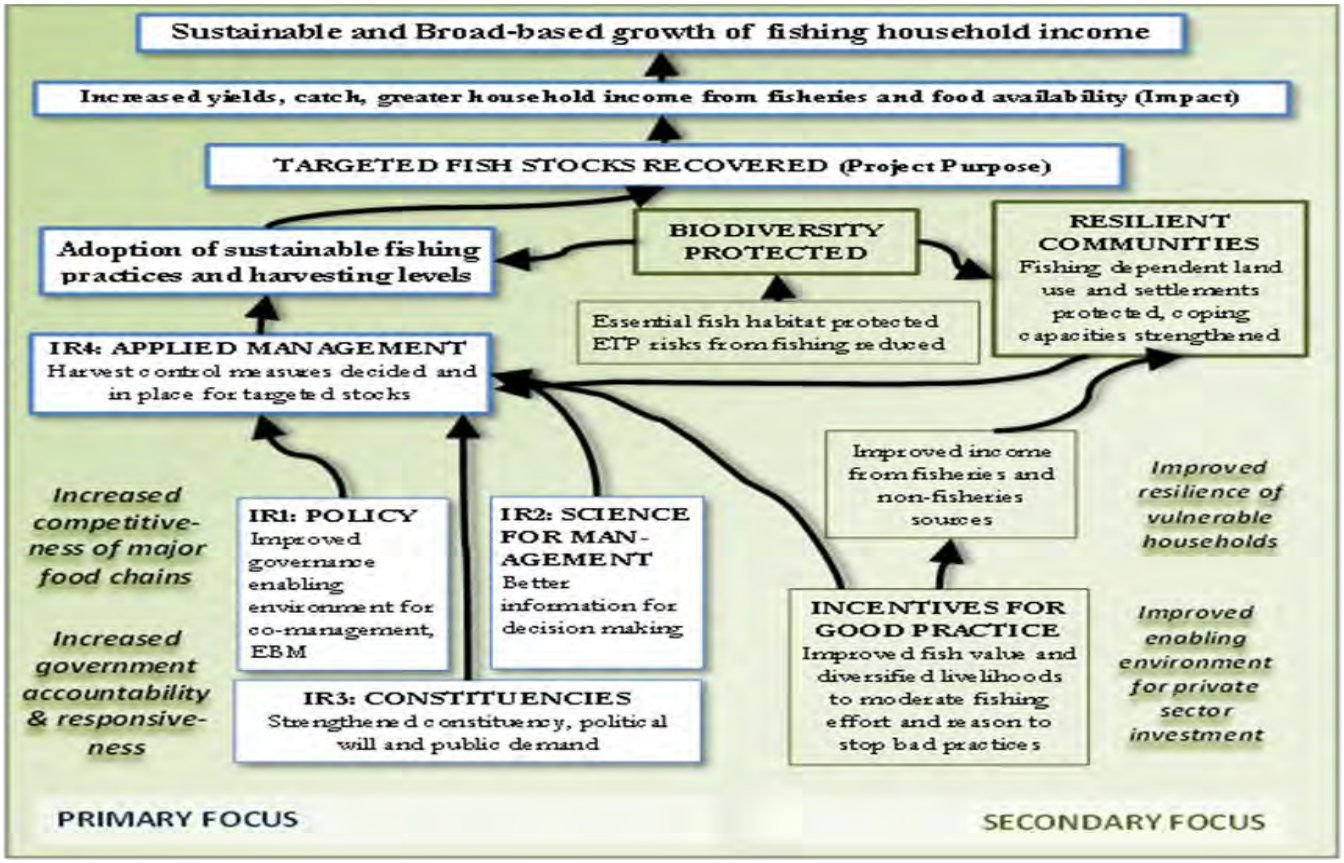

- Funded by USAID
- Implemented by Coastal Resource Center, University of Rhode Island
- Partners:

THE UNIVERSITY OF RHODE ISLAND GRADUATE SCHOOL OF OCEANOGRAPHY | COASTAL RESOURCES CENTER

Hɛn Mpoano

Friends of the Nation

SNV SMART DEVELOPMENT WORKS

SSG ADVISORS Catalyzing Development Through Partnership

Daasgift

CEWEFIA

DAA

SpS SPATIAL SOLUTIONS

Ahortor Oven

Designed by SNV, FRI, FC, Morrison Energy Services, Best Performance, consultant Crispin Pemberton-Pigott

- Reduces PAH deposit levels on smoked fish.
- 32% more fuel efficient than Chorkor
- Similar to baseline design and user friendly
- Standard double unit costs ~$500
- 30% discounted for early adopters
- Users are trained on the use and maintenance of the oven

Fish Quality Impacts

Chorkor Oven

Ahotor Oven

What Ahotor Users Say…

" My family and I can now cook in the kitchen whilst smoking my fish without having to deal with a smoky environment"

"I currently make savings on the firewood cost, because I use about half of what I previously used for the Chorkor oven"

"I haven't been to the hospital in the past three months since I started using the Ahotor oven"

Lessons Learned and Recommendations

Research & baseline

Pilot new concept

Stakeholder involvement & knowledge sharing

Technology development

Periodic monitoring

Next Steps – Sustainability Model

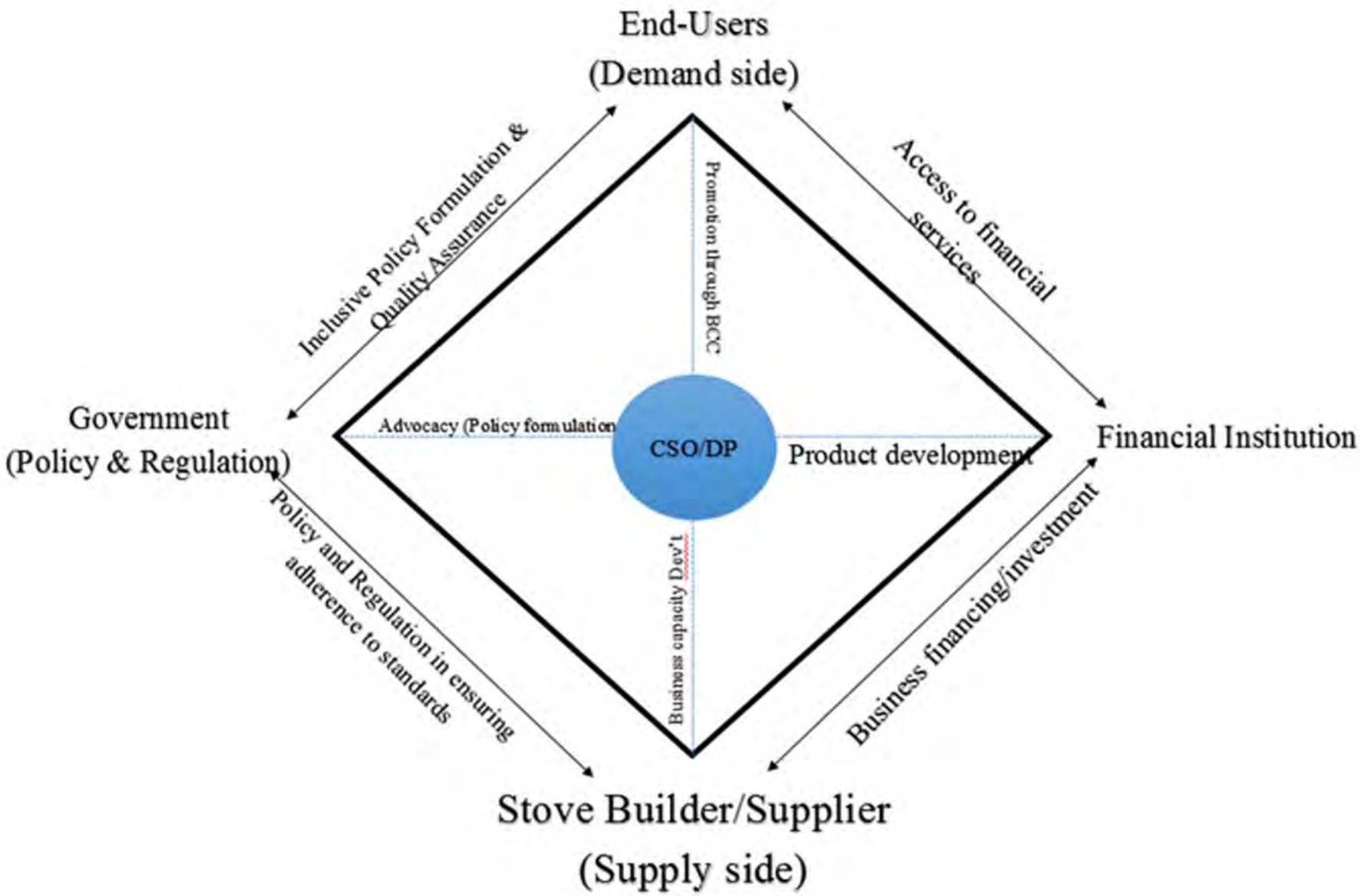

Thank You!!!

Open Q&A session

To ask a question, please type in your question in the Questions/Chat pane on your webinar console.

Next Steps

Following the webinar…

- The presentation and answers to your questions will be posted to www.pciaonline.org/webinars
- Please complete the Survey Monkey Evaluation you will receive shortly

Let us know…

- What surprised/interested you most about what you heard from the presenters?
- What information would you like to hear more about?
- What other topics would you like to see presented in the future?